REVISIONS				
ZONE	REV.	DESCRIPTION	DATE	APPROVED
.	.	.	.	.

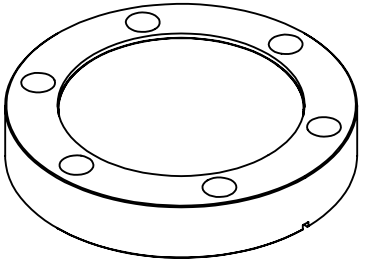

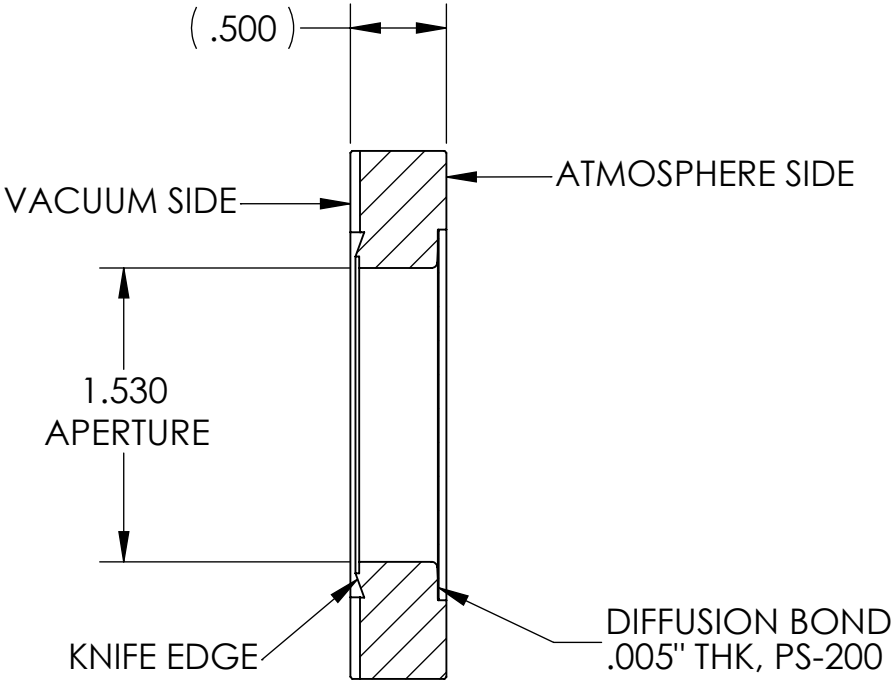

SECTION A-A

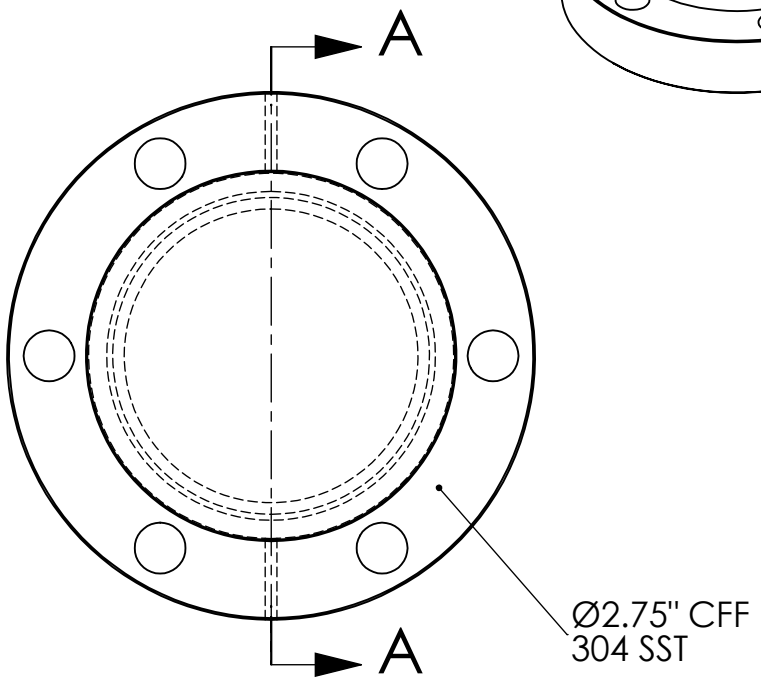

NOTES:
1. ASSEMBLY TO BE MASS SPECTROMETER LEAK TIGHT WITH NO LEAKS GREATER THAN 1 X 10-9 ATM CC/SEC OF He.

Interpret Drawing per ANSI Y14.5 M-1994.

UNLESS OTHERWISE SPECIFIED:

DIMENSIONS ARE IN INCHES
TOLERANCES:
FRACTION ±1/16
ANGLES ±0.5
.XX ±0.03
.XXX ±0.005

FINISH (Ra): 63

BW-ELECTROFUSION PROPRIETARY
Information included in this document not to be disseminated without prior written authorization.

	NAME	DATE
DRAWN	S. YANG	7/23/10
ENG APPR.	.	.

CUSTOMER
BWEFP CATALOG

MATERIAL
Be/SST

BRUSH WELLMAN
ELECTROFUSION PRODUCTS

TITLE:
Ø2.75" DB WDW ASM
.005" THK PS-200

SIZE	DWG. NO.	REV
A	44087	-

SCALE: 1:1 | DO NOT SCALE DRAWING | SHEET 1 OF 1